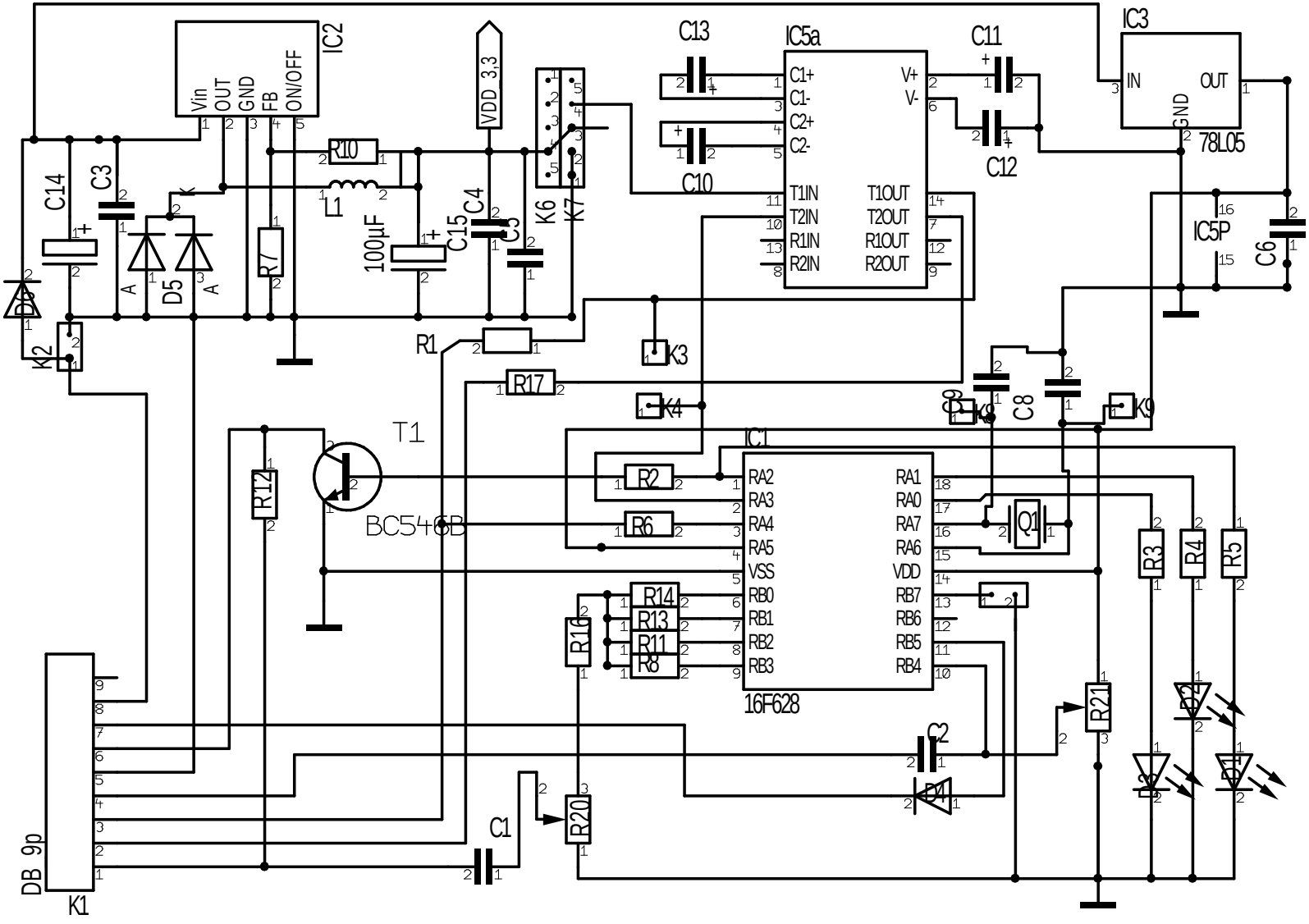
IC2
Vin
OUT
GND
FB
ON/OFF
VDD 3,3
C13
IC5a
C1+
C1-
C2+
C2-
V+
V-
T1IN
T2IN
R1IN
R2IN
T1OUT
T2OUT
R1OUT
R2OUT
C11
C12
C10
IC3
IN
OUT
GND
78L05
IC5P
C6
C14
C3
D6
D5
A
K
R7
R10
L1
100µF
C15
C4
C5
K6
K7
K2
R1
R17
K3
K4
C9
K8
C8
K9
T1
BC546B
R12
IC1
RA2
RA3
RA4
RA5
VSS
RB0
RB1
RB2
RB3
RA1
RA0
RA7
RA6
VDD
RB7
RB6
RB5
RB4
16F628
R2
R6
R14
R13
R11
R8
R16
Q1
R3
R4
R5
R21
L2
L3
L1
C2
D4
R20
C1
DB 9p
K1